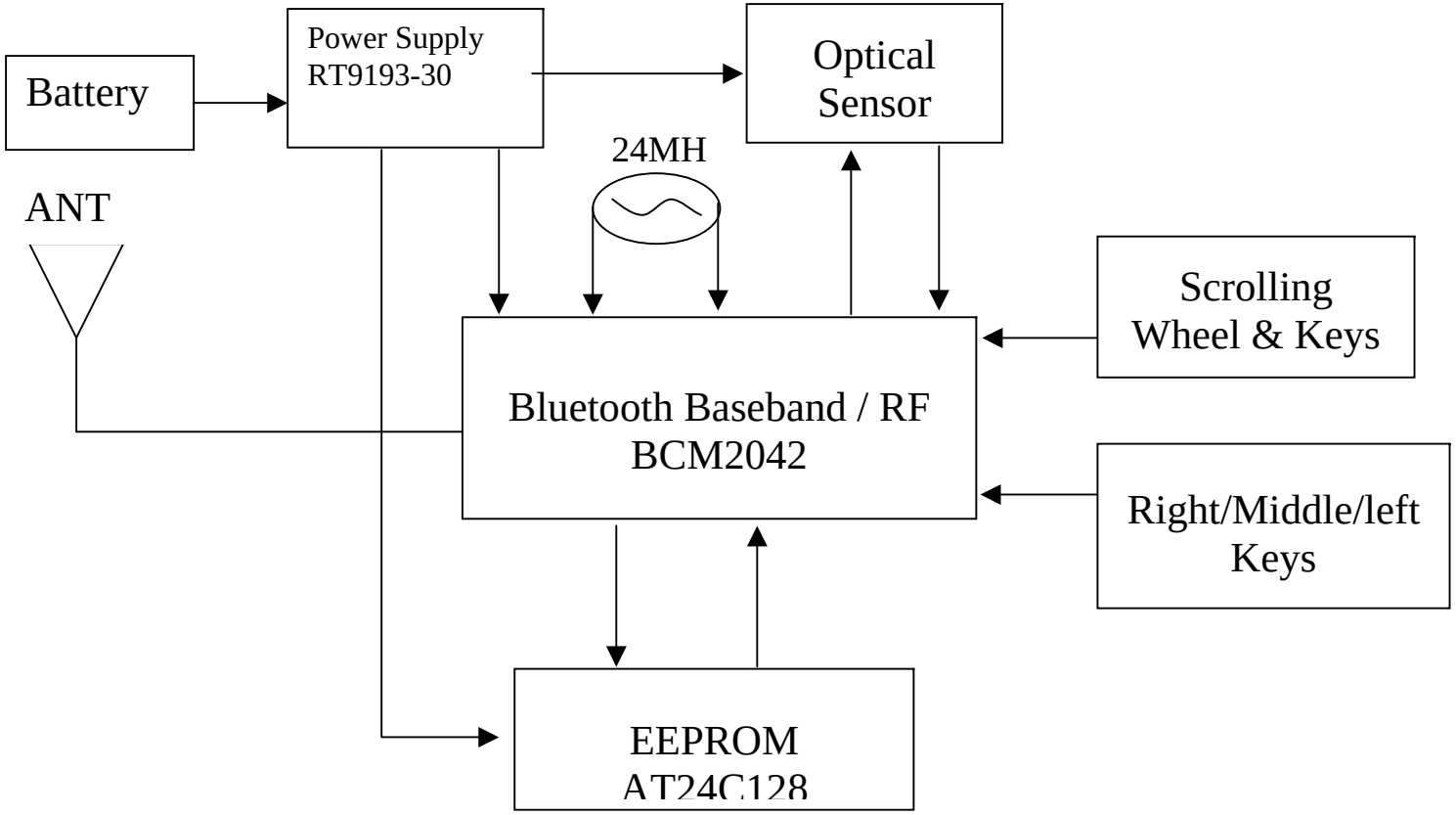Bluetooth Mouse
Model No: GME229B